On your own paper (graph paper)

Volumes of Revolution

1. Sketch the region bounded by the lines $y = 3$, $y = 1$, $x = 1$, $x = 6$.

c)

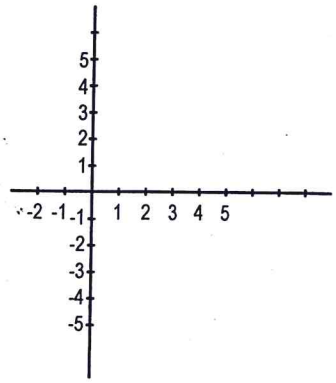

d) Determine the perimeter of the region.

e) Determine the area of the region.

f) Draw a picture of the region being revolved about the x-axis.

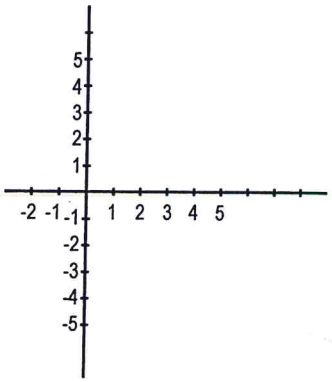

g) Describe the geometric solid formed by revolving the region about the x-axis.

h) Determine the volume of the geometric solid.

LAYING THE FOUNDATION
Building Academic Excellence

Mathematics

On your own paper (graph paper)

Volumes of Revolution

1. Sketch the region bounded by the lines $y = 3$, $y = 1$, $x = 1$, $x = 6$.

c)

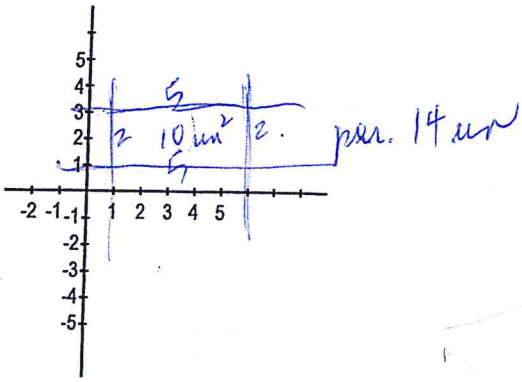

d) Determine the perimeter of the region.

e) Determine the area of the region.

f) Draw a picture of the region being revolved about the x-axis.

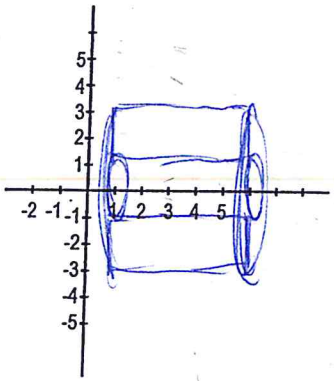

big cyl − little cyl
$\pi R^2 H - \pi r^2 H$
$\pi \cdot 3^2 \cdot 5 - \pi \cdot 1^2 \cdot 5$
$45\pi - 5\pi$
$40\pi \text{ un}^3$

$r = 1$
$R = 3$
$H = 5$

g) Describe the geometric solid formed by revolving the region about the x-axis.

cylinder w/ a hole

h) Determine the volume of the geometric solid.